PARTS LIST			
ITEM	QTY	PART NUMBER	DESCRIPTION
1	2	DRE1290-1	12 DIA ELBOW END SECTION
2	2	DRF1200	12 DIA MOUNTING FLANGE

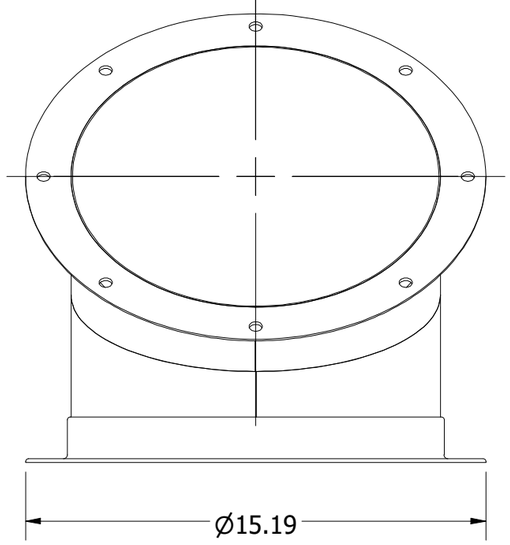

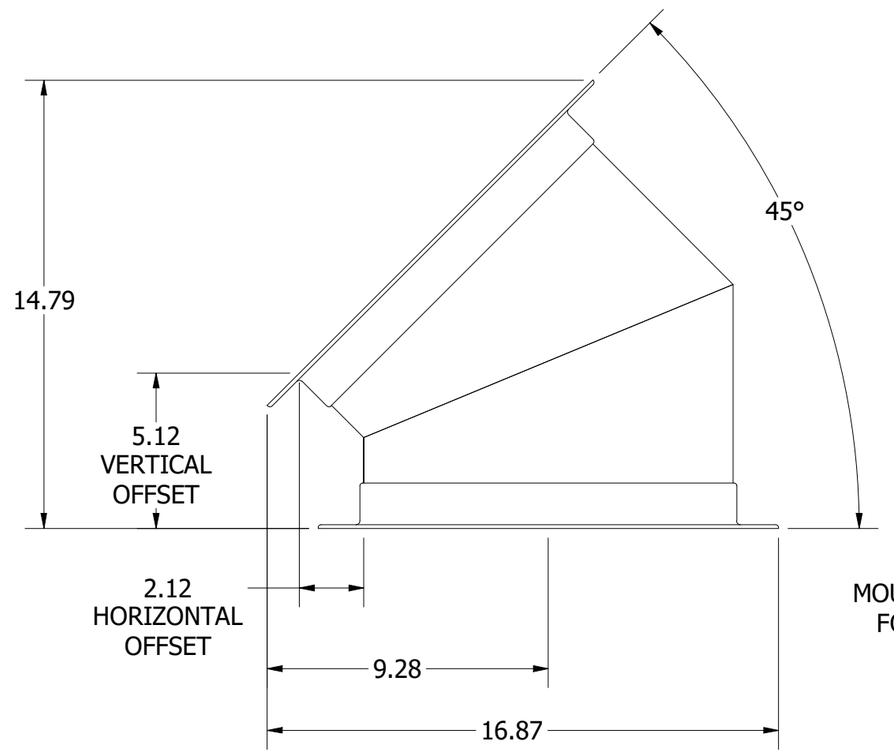

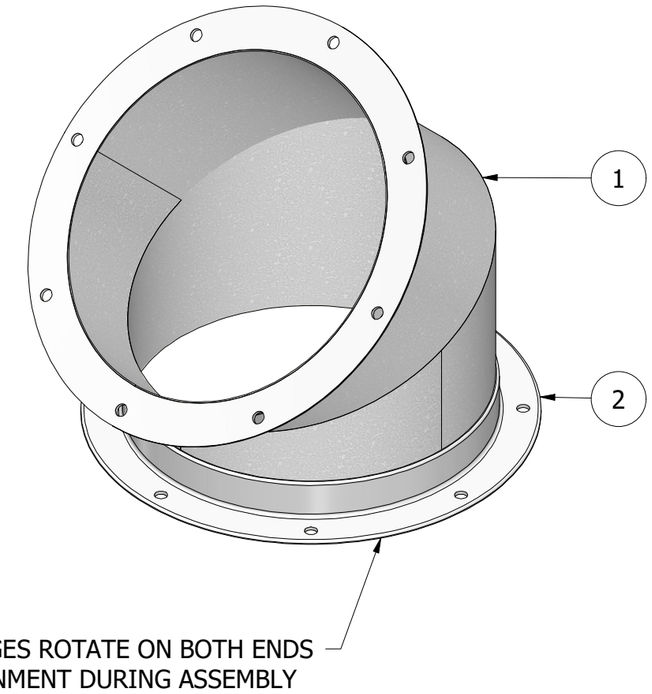

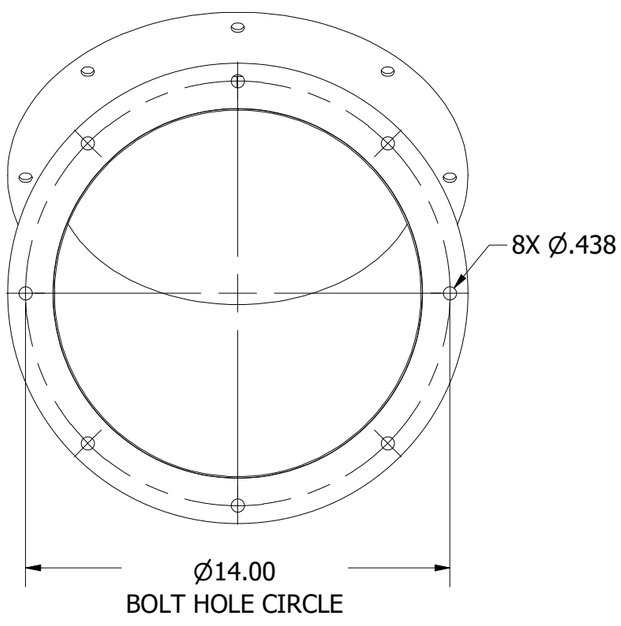

NOTES:

1. ELBOW CONSTRUCTED FROM 18GA G90 GALVANIZED STEEL.
2. MOUNTING FLANGES ROTATE FOR EASY ALIGNMENT DURING ASSEMBLY.
3. REFERENCE DUCTWORK MANUAL FOR INSTALLATION INSTRUCTIONS.

AUTHOR TCOOK	REV DATE 2/22/2022	COOK MANUFACTURING
UNLESS OTHERWISE SPECIFIED DIMENSIONS ARE IN INCHES		TITLE 12 DIA X 90° ELBOW
TOLERANCES 3 PLACES ± .020 2 PLACES ± .060 HOLES ± .010 FRACTIONS ± .125 ANGLES ± 2°	THIRD ANGLE PROJECTION	SIZE B / DWG NO DRE1245 / REV A
		SCALE 1/5 / SHEET 1 OF 1

M:\Engineering\Inventor\Cook Mfg\Workspace\Standard Parts\Ductwork\Round\Elbows\DRE1245.iam